HZ-100
Haze Machine
User Manual
- English
-中文

© 2023 Antari Lighting and Effects Ltd.

1. Introduction 1
2. Safety Information 1
3. Package Contents & Inspection 2
4. Machine Details 3
5. Technical Label Information 3
6. Haze Fluid 3
7. Setting and Manual Operation 3
8. Control Settings 4
9. HC-1 Timer Cable Remote (Optional) 4
10. HCR-1 Wireless Remote (Optional) 5
11. Service and Maintenance 5
12. Technical Specifications 5
13. Warranty Disclaimer 6
14. Machine Dimension 6
1. 前言 7
2. 安全注意事項 7
3. 包裝內容與檢查 8
4. 機器訊息 9
5. 技術標籤資訊 9
6. 煙霧水 9
7. 設定與手動操作說明 10
8. 控制設定 10
9. HC-1 有線定時控制器(選配) 10
10. HCR-1 無線控制器(選配) 11
11. 維護和保養 11
12. 技術規格 11
13. 保固聲明 12
14. 機器尺寸圖 12
Appendix I Grounding Instruction 13

HZ-100

★★★★★ HAZER ★★★★★

User Manual

1. Introduction

Please read all the user manual before operating the machine, and place the manual where the user can refer to it at all time. The manual includes how to install and operate the machine under safe conditions and explain all the labels printed on the machine. If you encounter any problem, contact your local Antari dealer for assistant immediately.

2. Safety Information

DANGER	If the danger is not avoided, it will cause death or serious injury
WARNING	If the warning is not heeded, it can cause death or serious injury.
CAUTION	If the precaution is not taken, it may cause minor or moderate injury.

DANGER

- Must connect the machine to the correct rated voltage or it might lead to an electrical shock or a burn and may cause serious consequences.
- Must connect the machine to a protected circuit and ensure it is properly grounded to avoid the risk of electrocution. For grounding instruction, please refer to Appendix I on page 13.
- Do not operate the machine with a bundled power cord, it could lead to a fire hazard.
- When operating the machine, do not point at people, animals, or fire.

WARNING

- Please operate the machine on a flat, level hard and well ventilated surface area, reserve at least 50cm space around the machine and make sure there is no flammable gas or material nearby.
- Do not disassemble, repair or modify the machine, it may cause damages, malfunction, risk of electrical shock or result in fire.
- The machine can only be operated by adults or professionals, is not intended for use by person with reduced physical sensory, mental capabilities, or lack of experience and knowledge including children.
- Do not leave the machine running unattended, make sure all powers are off when leaving.
- Children should be supervised to ensure that they do not play with the machine.
- Do not use the machine upside down or tilt it, it might cause damages or malfunction.
- Please store the fluid inside in a well ventilated area without direct sunlight and keep out of reach of children. In case of eye contact or accidentally swallow the fluid, please seek medical attention immediately.

CAUTION

- Keep the machine dry at all time. The machine is not waterproof, do not expose the machine to water, rain or moisture environment.
- Please make sure the power outlet is not damaged or loose before plug in the power cord.
- If the power cord is damaged, it must be replaced by Antari or its local dealers, otherwise the warranty will be

void.

- Before transporting the machine, please make sure the fluid is drained and tank is empty. (Recommend using original package)
- The machine is for indoor use only.
- Do not operate the machine in any area with unstable voltage.
- If you experience strange sound or malfunction, turn off the power and unplug the power cord immediately and contact your local Antari dealer for assistant.
- Do not contact any moving part.
- Only use accessories recommended or sold by Antari.
- Please make sure the power is off when not using the machine and unplug the power cord if not intend to use for a long period of time.
- To disconnect, turn all controls to the off position, then remove plug from outlet.
- Do not unplug by pulling on cord. To unplug, grasp the plug, not the cord.
- Unplug from outlet before servicing or cleaning.
- Do not operate the machine with a damaged cord or plug, or after the machine malfunctions or is dropped or damaged in any manner. Return machine to the nearest authorized service facility for examination, repair, or electrical or mechanical adjustment.
- To ensure the lifespan of the machine, please only use the fluid manufactured by Antari, do not use other fluid or additive, otherwise it may cause malfunction.

Before operating the machine, please read all warning labels on the machine, description as below;

Top Cover Printing
USE DEALER RECOMMENEDED HAZE LIQUID ONLY!

DO NOT OPEN CASE RISK OF ELECTRIC SHOCK

WARNING!
PLEASE USE RECOMMENED, NON-FLAMMABLE FLUID ONLY. MAKE SURE THAT THE LIQUID LEVEL DOES NOT EXCEED THE MARK AS MACHINE PERFORMANCE MAY SUFFER

Rear Cover Printing
WARNING!
DISCONNECT POWER BEFORE CHANGING FUSE.
USE ONLY WITH ADULT SUPERVISION.
DO NOT OPERATE WITHOUT LIQUID.
FOR INDOOR USE ONLY. KEEP DRY.
NO USER SERVICEABLE PARTS INSIDE.

MAX. FLUID LEVEL
MAKE SURE THAT THE LIQUID LEVEL DOES NOT EXCEED THIS MARK.

3. Package Contents & Inspection

Immediately upon receiving the machine, carefully unpack the carton, check the content to ensure it is the correct model and all parts are included. If any part appears to be damaged or missing during transportation, please contact your local dealer and return in original package for inspection.

3.1 Package Contents

1 x HZ-100 Haze Machine
1 x IEC Power Cable
1 x User Manual or scan QR Code on the Machine

3.2 Optional Accessories

Item Code	Description
HC-1	Timer Cable Remote
HCR-1	Wireless Cable Remote

4. Machine Details

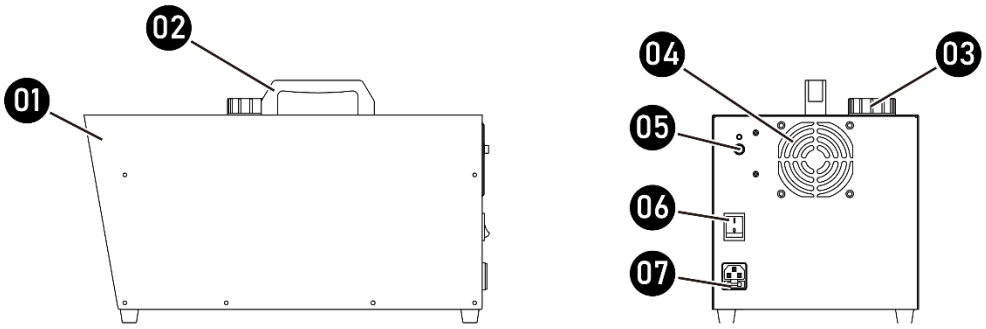

01. Fog Nozzle	05. Cable Remote Input
02. Handle	06. Power Switch
03. Fluid Tank Cap	07. IEC Power Connector
04. Fan	

5. Technical Label Information

Please read the technical label information on the back of the machine before operating it.

1. Model Name	5. Breaker/Fuse
2. Input Voltage	6. QR CODE for User Manual
3. Frequency	7. Serial No.
4. Rated Power	

6. Haze Fluid

CAUTION	Always turn off the power before filling the fluid tank. Do not add flammable liquid to the fluid tank. If fluid gets inside the machine, please contact your local Antari dealer for assistant.

- Only the haze fluid manufactured by Antari can be used, do not mix or dilute the haze fluid. Due to improper storage or using other fluid might cause malfunction.
- The machine is tested and calibrated with the specific haze fluid to get the best performance.
- Please empty the fluid in the tank before switching to another fluid to avoid mixing.
- The warranty on your haze machine will be void if you use haze fluid not manufactured by Antari.

7. Setting and Manual Operation

WARNING	Machine falling off might cause serious injury, please make sure it is secure and firm on the overhead.

Step 1. Place the machine on a flat, level hard and well ventilated surface area and reserve at least 50cm open space around the machine, and make sure there is no flammable gas or material nearby;
Step 2. Fill with Antari approved haze fluid;
Step 3. Connect the machine to the power outlet. Please read the technical label on the back of the machine and make sure the power outlet is the correspond to the rated voltage for the machine;
Step 4. Turn on the power, the machine will start hazing and turn off the power, the machine will stop hazing;
Step 5. To turn off the machine, please make sure the machine is not operating then turn of the power. If you will not use the machine a long period of time, please remove the power cord.

8. Control Settings

HZ-100 Haze Machine can be operated in the following modes. The machine can only accept 1 type of signal at a time. When using different control modes at the same time, the machine will work according to built-in control priority:

- Manual
- Timer
- Wireless

9. HC-1 Timer Cable Remote (Optional)

HC-1 Timer Cable Remote is an optional accessory for HZ-100 Haze Machine, please see instruction below;

Button/Knob	Function
DURATION [KNOB]	Adjust Duration
INTERVAL [KNOB]	Adjust Interval
POWER [RED BUTTON]	Power On / Off
HAZE [GREEN BUTTON]	Fogging On / Off
TIMER ON/OFF [YELLOW BUTTON]	Timer Mode On / Off

** If you encounter any problem, please contact your local Antari dealer for assistant.

10. HCR-1 Wireless Remote (Optional)

HCR-1 Wireless Remote is an optional accessory for HZ-100 Haze Machine, it included a receiver and a wireless transmitter. It's ready to use, no pairing necessary, please see instruction below;

1. Plug the receiver to the back of the machine;
2. Press BLUE button to start fogging and press RED button to stop fogging.

** Signal range is approximately 50m in open area, it may vary depending on actual situation on site.
** If you encounter any problem, please contact your local Antari dealer for assistant.

11. Service and Maintenance

DANGER	Disconnect the power cord before starting maintenance operation!

- Always keep the machine clean.
- Can use an air compressor, a vacuum or a soft brush to remove the dust on the machine.
- Can use a slightly damp cloth to clean the casing.
- Before store or after use the machine, please make sure the fluid box is empty and dry.
- It is recommended to run the machine at least once a month in order to maintain its best performance and output condition.
- Excessive dust and build up liquid residue will reduce the performance and cause overheat.

12. Technical Specifications

HZ-100	
Input Voltage	US Model : AC 100-120V, 50/60Hz 3.5A EU Model : AC 220-240V, 50/60Hz 2.0A
Rated Power	390W
Fluid Consumption	0.7 ml/min (100% output)
Fluid Tank Capacity	2.5 Liters (0.66 gallon)
Compatible Fluid	Antari HZL Haze Fluid
Operating Time	60 hrs (100% output)
Ambient Temp. Range	0°C – 40°C (32°F – 104°F)
Control Methods	Manual、Timer (Optional)、Wireless (Optional)
Interface	IEC (Power)
DMX Channels	N/A

Included Accessories	N/A
Optional Accessories	HC-1 Timer Cable Remote、HCR-1 Wireless Remote
Dimension	L 484 W 250 H 294 mm (L 19.06 W 9.84 H 11.57 inch)
Weight	13.2 kg (29.10 lbs.)

13. Warranty Disclaimer

We guarantee the merchandise manufactured by us to be free from defect in material and workmanship for a period of one year. Our obligation and liability under this warranty shall be restricted to repair or replacement at our factory or local authorized dealer. We assume no liability of the products that are improperly used or used for any purpose other than that for which they are specially designed. This warranty shall not apply to any merchandise which has been repaired, altered or assembled outside our factory in any way so as in our judgment to affect its performance, nor which has been subjected to misuse, negligence, or accident nor to any merchandise operated contrary to our printed instructions. We will not allow or be liable of any loss or any damages of any kind in connection with the use, sale, or repair of any merchandise purchased from us.

14. Machine Dimension

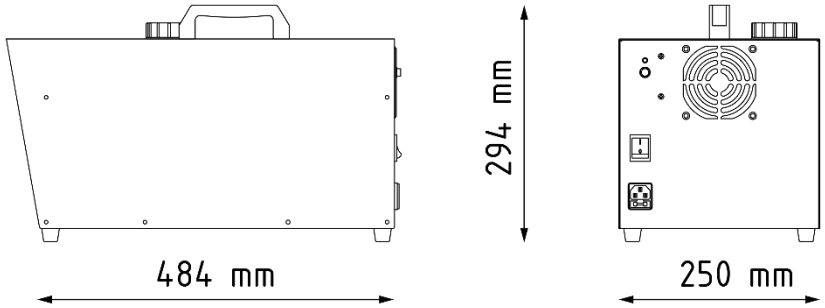

HZ-100

★★★★★ HAZER ★★★★★

中文使用說明書

1. 前言

在操作本機器之前，請務必仔細詳閱本說明書然後請將本說明書放置在機器使用者可隨時查閱之處存放。此說明書包含如何安全的安裝及操作本機器以及說明所有在機器上的標示。如果您有任何操作上的問題，請立即聯繫當地的 Antari 經銷商尋求協助。

2. 安全注意事項

危險	若不確實避免這些指示，可能導致嚴重人身傷害甚至死亡。
警告	若不確實遵循這些指示，可能導致嚴重人身傷害甚至死亡。
注意	若不確實注意這些指示，可能導致人身傷害甚至死亡，嚴重程度視情況而定。

危險

- 請務必使用正確電壓。如果使用錯誤電壓，可能會遭受危險的電擊燒傷或更嚴重的後果。
- 請務必將機器連結到有保護的電路，並確保有正確的接地，以避免觸電的危險。關於接地方式請參考第 13 頁附錄 I。
- 請勿在捆綁電源線的情況下使用，可能會發熱導致火災。
- 操作機器時請勿將機器對著人體、動物或火焰使用。

警告

- 請於堅固、平坦、穩定且通風良好的表面上使用機器。請勿遮蓋機器散熱部份，機器周邊至少應保留 50 公分的空間並確認附近沒有易燃性物質或可揮發性氣體。
- 請勿隨意拆卸、修理或改造機器，這可能會導致機器故障、損壞、觸電危險或造成火災。
- 本機器僅限有行為能力之成人或專業人員操作，不預期提供生理、感知、心智能力、經驗或知識不足者之使用者(包含孩童)使用本機器。
- 請勿在無人看管時讓機器運作，並於外出離去時確實關閉電源。
- 孩童應受監督，以確保孩童不能操作或嬉戲玩本機器。
- 請勿將機器倒放或傾斜使用，可能導致機器動作不正常或損壞。
- 請將液體存放在室內孩童無法取得之處，保持通風及避免陽光直射。如果有觸碰眼睛或誤食機器，請立即尋求醫生的協助。

注意

- 本機器無防水設計，請隨時保持機器乾燥，嚴禁將其潑水、浸水、淋雨或放在潮溼的環境。
- 在插入電源插座前，請確認電源插座無損壞或鬆動。

- 若電源線損壞，必須使用原廠電源線或組件進行更換，否則將導致保固無效。
- 在運輸本機器前，請確認機器的油箱已清空並且包裝完整。(建議使用原廠包裝)
- 本產品僅限室內使用。
- 請勿在電壓不穩定的地區使用本機器。
- 如果機器出現異常聲音或有任何不正常現象時，請立即停止工作，將電源關閉及拔下機器電源線，並請聯繫當地的 Antari 經銷商尋求協助。
- 請勿觸碰機器內部運轉零件。
- 只能使用原廠建議或販售之配件。
- 請確認機器不在使用的狀態下電源已關。如果長時間不使用機器，請拔掉電源線。
- 關閉機器時，將控制開關轉到關閉的位置，然後再將插頭從插座拔除。
- 拔除電源線時，請抓住插頭不是電線。
- 在保養及清潔前，請把電源線從插座拔除。
- 在電線或插座有損毀、機器故障或有掉落或損壞的情形發生時，請勿操作機器。請將機器送回最近的維修站，做檢查、維修及電源或機械的調整。
- 為確保機器的使用壽命，請使用 Antari 原廠製造之煙霧水，勿使用其它非 Antari 原廠製造煙霧水或添加劑，否則可能會導致故障。

在使用本機之前，請詳細閱讀機器上的警語標示，說明如下：

<u>上蓋印刷</u>

USE DEALER RECOMMENEDED HAZE LIQUID ONLY! 只限使用原廠建議煙霧水

DO NOT OPEN CASE RISK OF ELECTRIC SHOCK 請勿打開上蓋避免觸電危險

WARNING! 警告!
PLEASE USE RECOMMENED, NON-FLAMMABLE FLUID ONLY. MAKE SURE THAT THE LIQUID LEVEL DOES NOT EXCEED THE MARK AS MACHINE PERFORMANCE MAY SUFFER
請使用建議非易燃液體. 確保液體不會超出此標線避免影響機器性能

<u>後蓋印刷</u>
WARNING! 警告!
DISCONNECT POWER BEFORE CHANGING FUSE. 更換保險絲前請務必斷開電源
USE ONLY WITH ADULT SUPERVISION. 僅在成人監督下使用
DO NOT OPERATE WITHOUT LIQUID. 請勿在沒有液體的情況操作本機台
FOR INDOOR USE ONLY. KEEP DRY. 僅限室內使用 請保持乾燥
NO USER SERVICEABLE PARTS INSIDE. 內部無使用者可維修之零配件

MAX. FLUID LEVEL 液體最高高度
MAKE SURE THAT THE LIQUID LEVEL DOES NOT EXCEED THIS MARK. 確保液體不會超出此標線

3. 包裝內容與檢查

在收到機器後，請立即小心地打開包裝紙箱，檢查所有內容，確認您所購買的機型及配件。如果有任何部件因運輸過程出現損壞或缺少，請立即連絡經銷商，並以原包裝退回檢查。

3.1 包裝內容

1 x HZ-100 薄霧型特效煙霧機
1 x IEC 電源線
1 x 說明書或掃描機身 QR CODE

3.2 選配說明

品項	描述
HC-1	有線定時控制器
HCR-1	無線控制器

4. 機器訊息

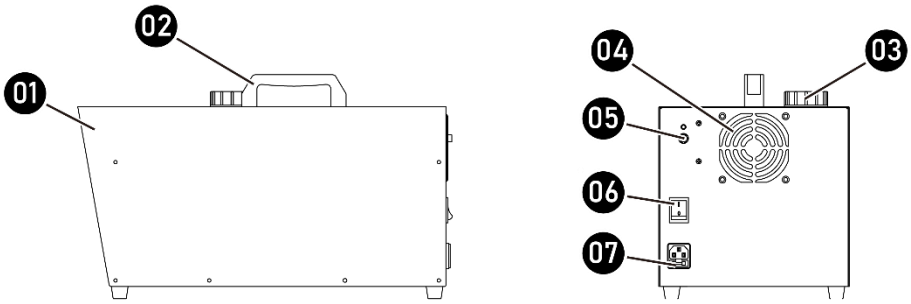

01. 噴煙口	05. 有線控制器連接頭
02. 把手	06. 電源開關
03. 油桶蓋	07. IEC 電源連接頭
04. 風扇	

5. 技術標籤資訊

使用本機器前，請詳閱技術標籤上的訊息

1. 機器型號	5. 斷路器/保險絲
2. 工作電壓	6. 說明書 QR CODE
3. 頻率	7. 機器流水序號
4. 瓦特數	

6. 煙霧水

危險	將液體加入機器之前，請務必先拔除電源線。請勿添加易燃液體。如果發現液體流入機器內部，請洽 Antari 原廠或其經銷商尋求協助。

- 僅能使用 Antari 原廠製造之煙霧水，不可混用或稀釋。若因保存不當而變質或使用非原廠煙霧水，將可能造成機器故障。
- 本機器是使用專屬的煙霧水做測試與校正來取得最佳的效能。
- 如需更換另一種液體，請在使用前，先將油桶中的液體清空，以避免混合。
- 如果使用非原廠製造之煙霧水而導致煙霧機損壞將不在保固範圍內。

7. 設定與手動操作說明

警告	機台掉落可能會造成嚴重傷害，請確保本機台安裝牢固且不會掉落。

步驟1. 將機器平放在堅固、平坦、穩定且通風良好的表面上，機器周圍至少應保留 50 公分的空間並確認附近沒有易燃性物質或可揮發性氣體;

步驟2. 使用 ANTARI 原廠專用煙霧水注入機器;

步驟3. 將機器連接電源，連接之前，確認機器背後技術標籤上所標示要求功率，是否與電源插座相符;

步驟4. 開啟電源後，機器開始噴煙，關閉電源後，機器停止噴煙;

步驟5. 需關閉本機時，請確認機器已停止運轉，再將電源開關關閉即可，長時間不使用時請移除電源線。

8. 控制設定

HZ-100 薄霧型特效煙機可以使用下列操作模式，機器每次接受一種訊號。當同時間使用多種訊號時機器將根據原廠內建訊號的優先順序來進行工作:

- 手動控制
- 定時控制
- 無線控制

9. HC-1 有線定時控制器(選配)

HC-1 有線定時控制器是 HZ-100 薄霧型特效煙霧機的選購配件。

按鈕/旋鈕	功能
DURATION[旋鈕]	調整輸出時間
INTERVAL[旋鈕]	調整間隔時間
POWER[紅色按鈕]	電源 開/關
HAZE[綠色按鈕]	開始/停止噴煙
TIMER ON/OFF[黃色按鈕]	定時模式 開/關

**如果有任何問題，請聯繫當地的 Antari 經銷商尋求協助。

10. HCR-1 無線控制器(選配)

HCR-1 無線控制器是 HZ-100 薄霧型特效煙霧機的選購配件，它包含一個接收器和一個無線發射器。此配件是隨插即用，不需要做配對，使用方法如下;

1. 將接收器插入機器後方的接頭;
2. 按藍色按鈕開始噴煙，按紅色按鈕停止噴煙。

**訊號距離約 50 公尺，但將根據現場狀況有所不同。

**如果有任何問題，請聯繫當地的 Antari 經銷商尋求協助。

11. 維護和保養

危險	維修保養之前，請務必拔除電源線！

- 隨時保持機器清潔。
- 可以使用空氣壓縮機、吸塵器或軟刷除去機器上的灰塵。
- 機殼可使用濕布擦拭。
- 在存放機器前或使用機器後，請確認液體已經完全清空並保持乾燥。
- 建議每月至少讓機器運轉一次，以保持機器處於最佳的性能和輸出條件。
- 機器上過多的灰塵、液體殘餘累積的髒污會降低機器工作性能，導致散熱不良。

12. 技術規格

HZ-100	
電壓	美規 : AC 100-120V, 50/60Hz 3.5A 歐規 : AC 220-240V, 50/60Hz 2.0A
額定功率	390 瓦
耗油量	0.7 毫升/分鐘 (100%輸出)
油桶容量	2.5 公升(0.66 加侖)
適用煙霧水	Antari HZL 特效煙霧水
運作時間	60 小時 (100%輸出)
適用環境溫度	0°C – 40°C (32°F – 104°F)
控制方式	手動控制、定時控制(選配)、無線控制(選配)
連接座	IEC (主電源)
DMX 512 通道	N/A
隨附配件	N/A

選購配件	HC-1 有線定時控制器、HCR-1 無線控制器
尺寸	長 484 寬 250 高 294 公釐 (長 19.06 寬 9.84 高 11.57 英寸)
重量	13.2 公斤 (29.10 磅)

13. 保固聲明

本公司保證我們的商品在一年內沒有材料和製作缺陷。我們在本保證下的義務和責任僅限於在原廠或當地授權經銷商進行的維修或更換。我們對不當使用或用於非專門設計目的以外之用途不承擔任何責任。本保固不適用於以任何方式在原廠或當地授權經銷商外修理、改動或組裝的任何商品，以便我們判斷影響其性能，沒有受到誤用、疏忽或事故的影響，也沒有違反我們的任何商品操作印刷說明。本公司對於從我們這邊購買的商品不會允許也不對於使用、銷售或修理任何產品有關的任何類型的任何損失或損害承擔責任。

14. 機器尺寸圖

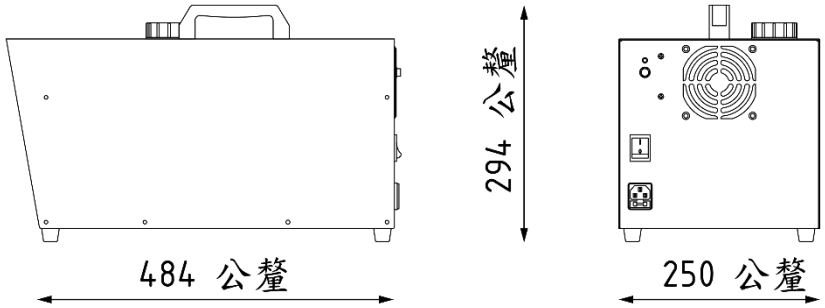

Appendix I Grounding Instruction

This appliance must be grounded. In the event of malfunction or breakdown, grounding provides a path of least resistance for electric current to reduce the risk of electric shock. This appliance is equipped with a cord having an equipment-grounding conductor and a grounding plug. The plug must be plugged into an appropriate outlet that is properly installed and grounded in accordance with all local codes and ordinances.

DANGER – Improper connection of the equipment-grounding conductor can result in a risk of electric shock. The conductor with insulation having an outer surface that is green with or without yellow stripes is the equipment-grounding conductor. If repair or replacement of the cord or plug is necessary, do not connect the equipment-grounding conductor to a live terminal. Check with a qualified electrician or serviceman if the grounding instructions are not completely understood, or if in doubt as to whether the appliance is properly grounded. Do not modify the plug provided with the appliance – if it will not fit the outlet, have a proper outlet installed by a qualified electrician.

This appliance is for use on a nominal 120 V circuit, and has a grounding plug that looks like the plug illustrated in sketch A in Figure. A temporary adaptor, which looks like the adaptor illustrated in sketches B and C, may be used to connect this plug to a 2-pole receptacle as shown in sketch B if a properly grounded outlet is not available. The temporary adaptor should be used only until a properly grounded outlet can be installed by a qualified electrician. The green colored rigid ear, lug, and the like, extending from the adaptor must be connected to a permanent ground such as a properly grounded outlet box cover. Whenever the adaptor is used, it must be held in place by the metal screw.

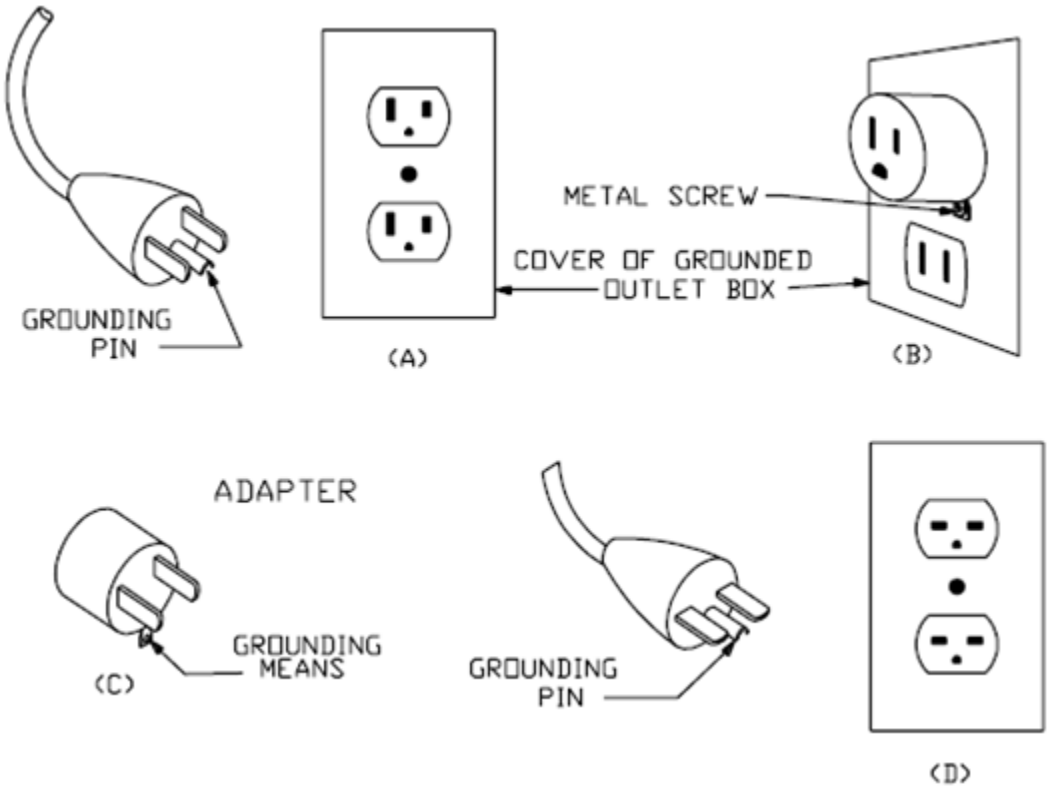

Antari®
FOG MACHINE

C08HZ0100